Raytheon

Customer Success Is Our Mission

Common SysML Conceptual Stumbling Blocks

San Diego INCOSE Mini-Conference 2013.11.02

Rick Steiner

~~fsteiner@raytheon.com~~

rick@ricksteiner.net

What to Systems Engineers have problems with when learning SysML?

Raytheon

1. ***SysML is too complex!**** (flexibility vs. complexity)
2. ***What does that darn diagram header mean?**** (models vs. diagrams)
3. Why do I need ***both*** ibds ***and*** bdds? (definition vs. use)
4. ***Activity diagrams have no activities on them!**** (activity modeling vs. functional hierarchy)
5. ***Why not use packages for my product breakdown structure?**** (composition vs. containment)
6. How is SysML different than Matlab? (parametric modeling)
7. Why do I care about Units? (values, value types, units and quantity kinds/dimensions)
8. Why isn't SysML executable? (functionality vs. model execution)

* Recommended to be discussed at the SDINCOSE mini-conference

Raytheon

Issue #1: SysML is too complex! What do you need?

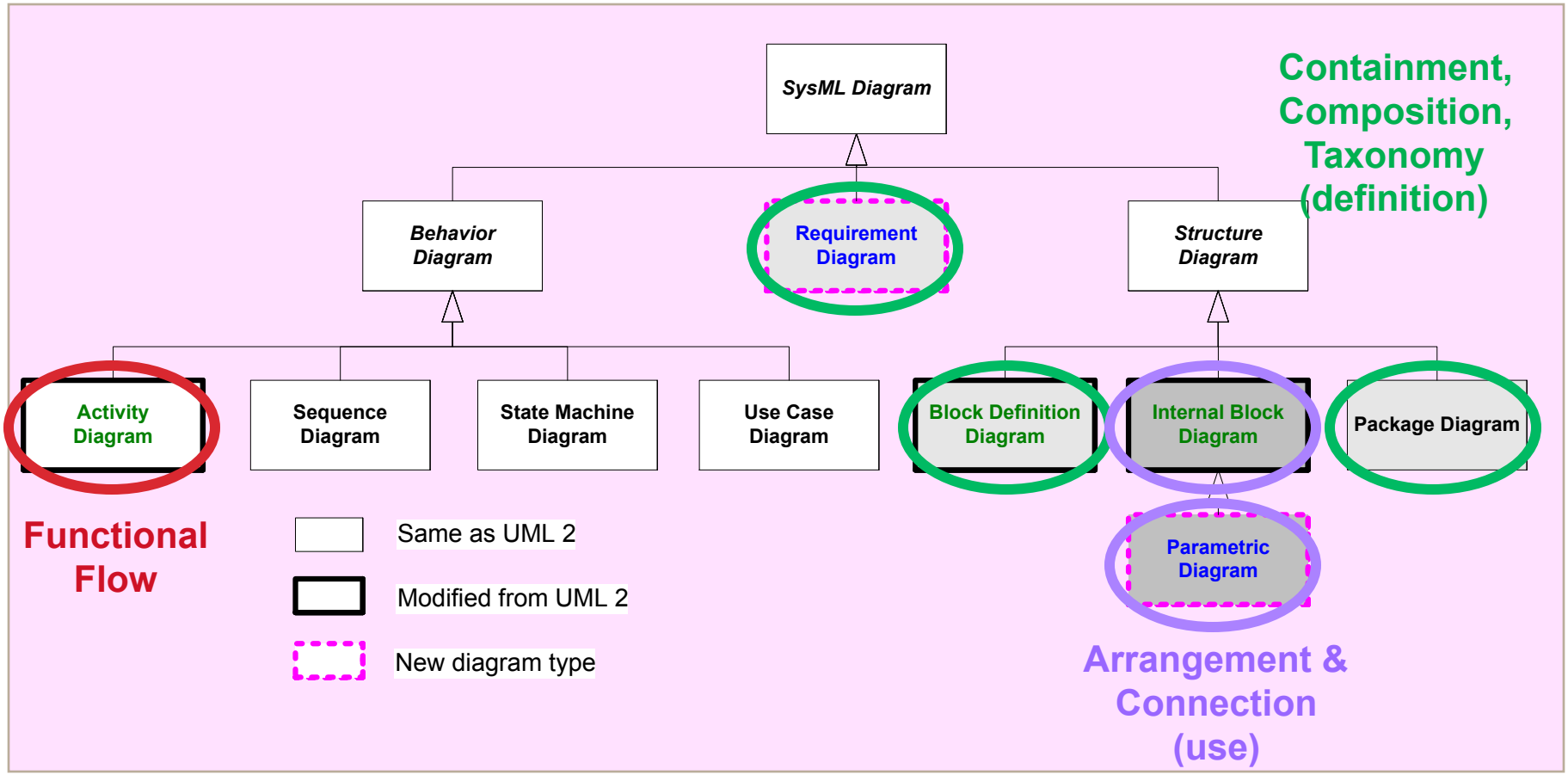

"Traditional" SE can be done with only 3 Basic Diagram Types

Motivation for the Systems Modeling Language

- **Systems Engineers needed a standard graphical modeling language**
  - Many different modeling techniques/languages have been used for developing system models:
    - Behavior diagrams, IDEF0, N2 charts, Hatley-Pirbhai
    - Tools tended to support only one of these techniques/languages
  - The SE discipline has lacked a broad-based standard that to support general purpose system modeling needs
- **Why use the Unified Modeling Language (UML) as a basis?**
  - UML has become a de facto standard within software engineering
  - UML tools and training are widely available, and generally adaptable
  - OMG standardization process supports UML customization for specific domains (e.g., systems engineering, real-time, SOA, etc.)
- **SysML was developed to meet broad SE application**
  - SE Domain Special Interest Group jointly sponsored by INCOSE and OMG in 2001
  - UML Profile for SE followed structured process: RFI , SE conceptual model (2002), requirements analysis, RFP (2003) with clear, detailed requirements for any language supporting systems engineering.
    - Submissions needed to demonstrate their compliance with those requirements.
    - A panel of INCOSE experts evaluated this compliance before adopting SysML 1.0 in 2006.
  - Adoption of SysML by industry indicates that it has met the objective of being a broadly useful system modeling language.

Issue #2: Those darned Diagram Headers! (Models vs. Diagrams)

Raytheon

- Powerpoint & Visio teach us to take diagrams at face value
  - They can be manipulated independently, easily abstracted
  - I can add whatever I want, without rigor or process
- Good modeling tools tend to reinforce this impression
  - Drag and drop symbols, easy relationships
- But good modelers work mostly from the <u>model browser</u>
  - Drag elements from the browser on to the diagram
  - Can actually build models without using a diagram at all!
  - Tools render/update diagrams from the model
- Remember that reports, scripts and checkers run on the Model, not the Diagrams!
- Tables and matrices are also excellent model viewers
- Good modeling practices are consistent with good diagrams
  - Minimize number of elements at each layer of abstraction
  - Elide unnecessary information on the diagram… use views/viewpoints
  - Give the diagram a meaningful name!

SysML Diagrams exist in Model Context

- Each SysML diagram represents a model element
  - This provides the necessary context for every diagram
- Each SysML Diagram must have a Diagram Frame
- Diagram context (the element it represents) is indicated in the header:
  - Diagram kind (act, bdd, ibd, seq, etc.)
  - Model element type* (activity, block, interaction, etc.)
  - Model element name
  - Descriptive diagram name*

*Some parts of the diagram header can be elided, if it doesn't cause confusion

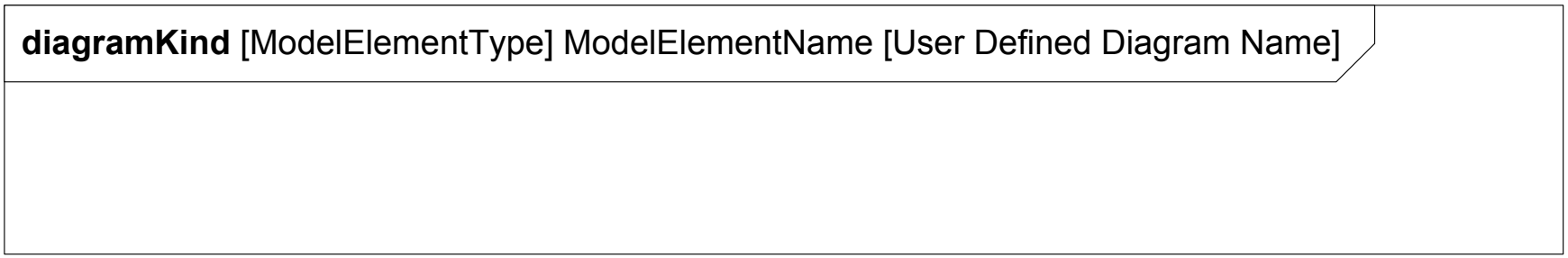

Issue #3: *Definition* and *Use* in SysML

- This is the biggest "stumbling block" for new SysML users without a software background
  - "Why do I need BOTH a **bdd** and an **ibd**?"
  - If you need to ask the question, <u>just build the **ibd**</u>!
    - **bdd's** are NOT mandatory, but you will eventually want them.
    - Building the bdd later will cause minor rework.
    - **bdd's** and **ibd's** are complimentary aspects of a single structural model
  - Same principle applies to parametric & activity models
- Definition vs. Use:
  - **Define** a model element in one place in the model.
  - **Use** it everywhere it is needed. Don't redefine it unless you need to.
- See the "structure" corner of the pillars chart
- Mechanical engineers have less problem with this
  - They are used to defining parts, then using them

Example of Definition vs. Use

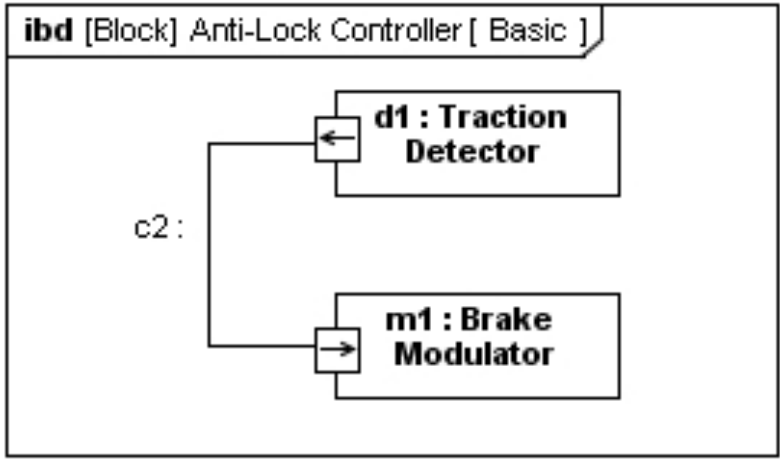

use

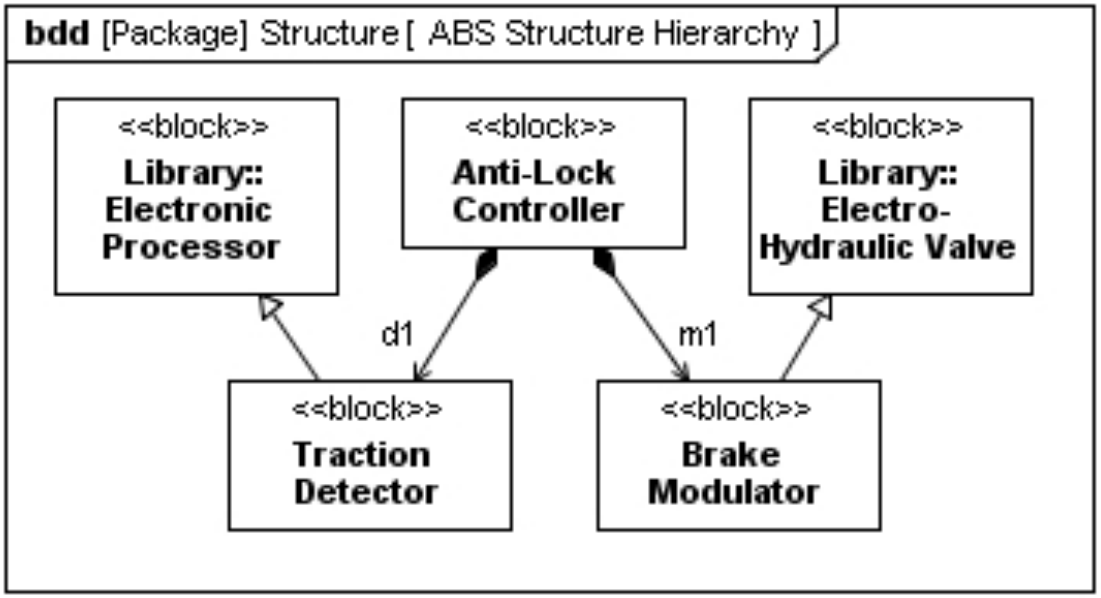

definition

Issue #3a: Activity Modeling & Functional Hierarchy

Raytheon

- Activity models are intuitive
  - Functional flow, control & data flow…
- Activity diagrams represent **Use**
  - What about **Definition**? The bubbles on act's are Actions, not Activities!
- Activity models are usually built without regard to functional hierarchy
  - Tools don't support functional hierarchy very well.
- Recommendation:
  - Don't put an Action on an activity diagram without having it call an Activity. Use only CallBehaviorActions.
  - Manage the Activities in a separate set of packages, just like blocks.
  - Generate functional hierarchies using **bdd's**

Activity Model & Functional Hierarchy

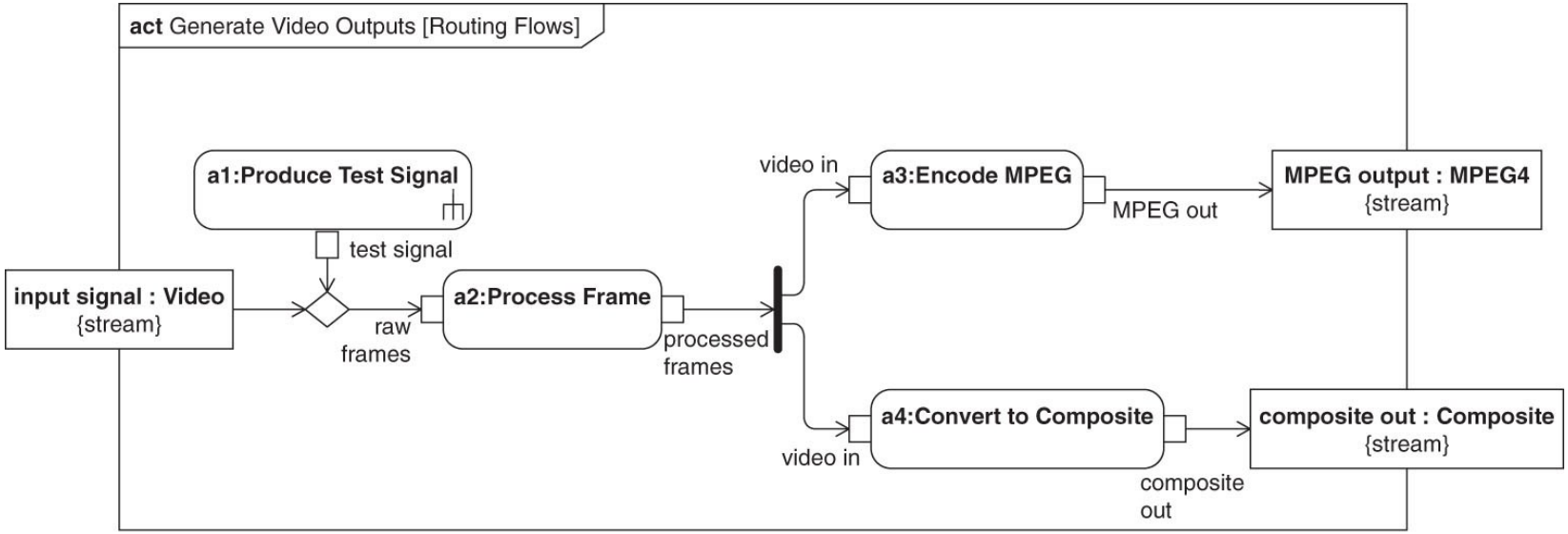

FIGURE 8.1

An example activity diagram.

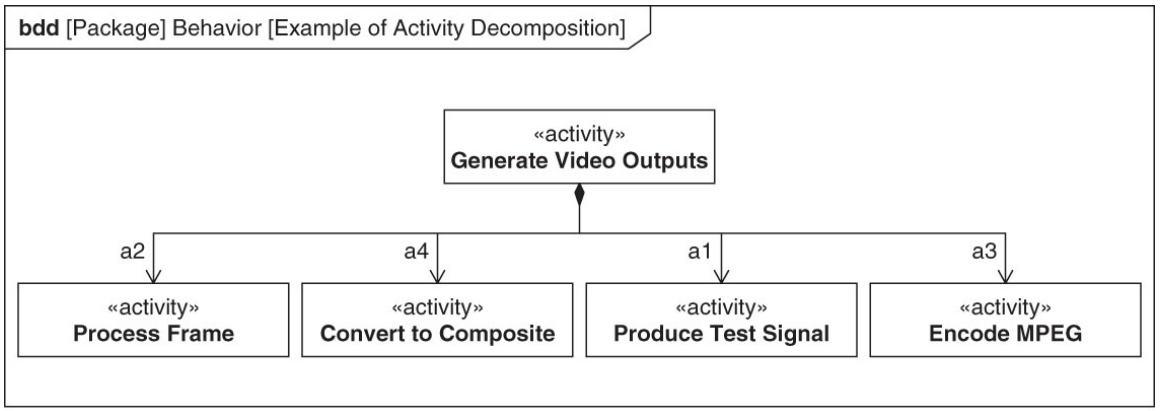

FIGURE 8.2

An example of an activity hierarchy in a block definition diagram.

Issue #4: Containment vs. Composition

- This is a common issue for even experienced modelers
- Containment relation is seldom seen on diagrams (crosshair), but is the basis for the model browser.
  - Packages exist as “containers” for organizing the model
  - Blocks, Requirements can also be “containers”… but I advise against it!

- Composition (black diamond) is a way of representing **Use** on a **Definition** diagram.
  - Composition role names on the **bdd** correspond to part/action names on the **ibd/act**.

Containment in Browser & Package Diagram

Raytheon

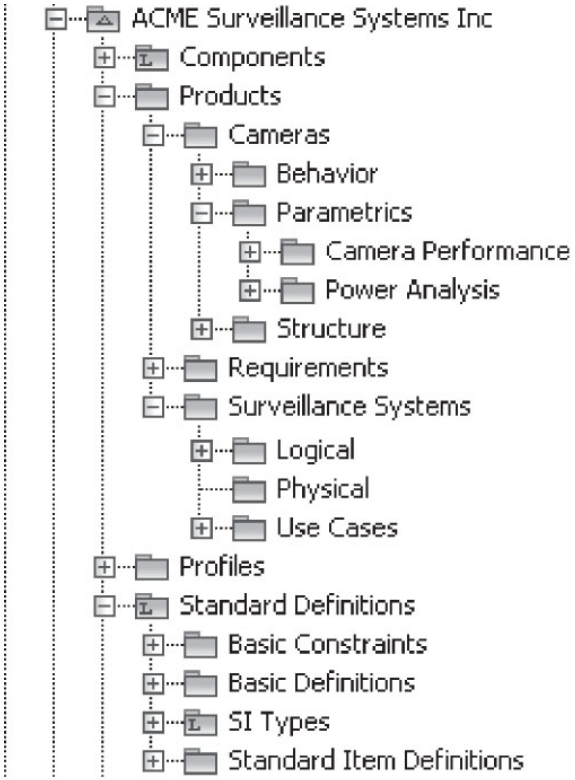

FIGURE 5.4

Browser view of the model's package hierarchy.

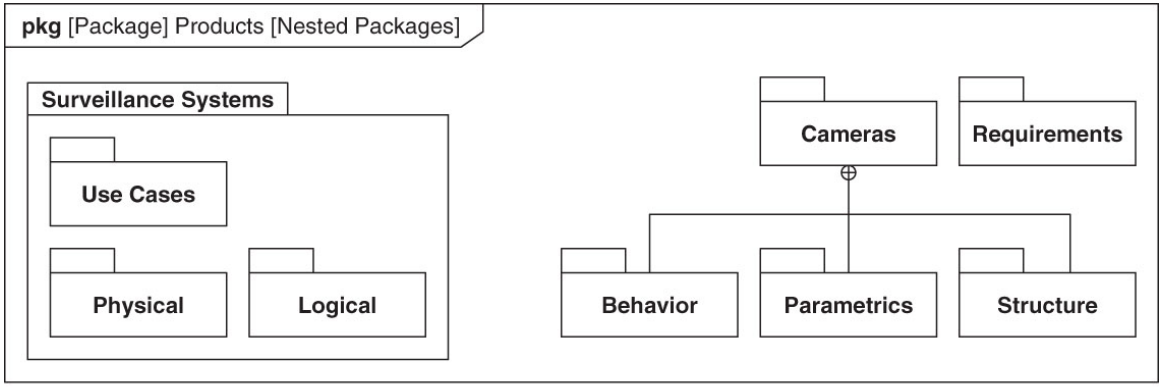

FIGURE 5.3

Showing nested packages on a package diagram.

Containment/Package Structure Suggestions

Raytheon

- Structural hierarchy:
  - Treat every block as reusable
    - Put them in a package where modelers can find them… based on what they are, not how they are used
  - Build **ibd's** from blocks in the browser (drag & drop). Autorender the **bdd's** after the **ibd's** have been built.
    - Untyped parts are poor modeling form
  - Enterprise Architect Demo
- Functional hierarchy
  - Treat every activity as reusable
  - Build **act's** from activities in the browser. Most tools won't autorender bdd's, so this will be a little more work.
- Data/Info Model
  - Enforce all data types in one convenient containment hierarchy
  - Put FlowSpecifications or InterfaceBlocks in the hierarchy too

Package Diagram
Organizing the Model

Raytheon

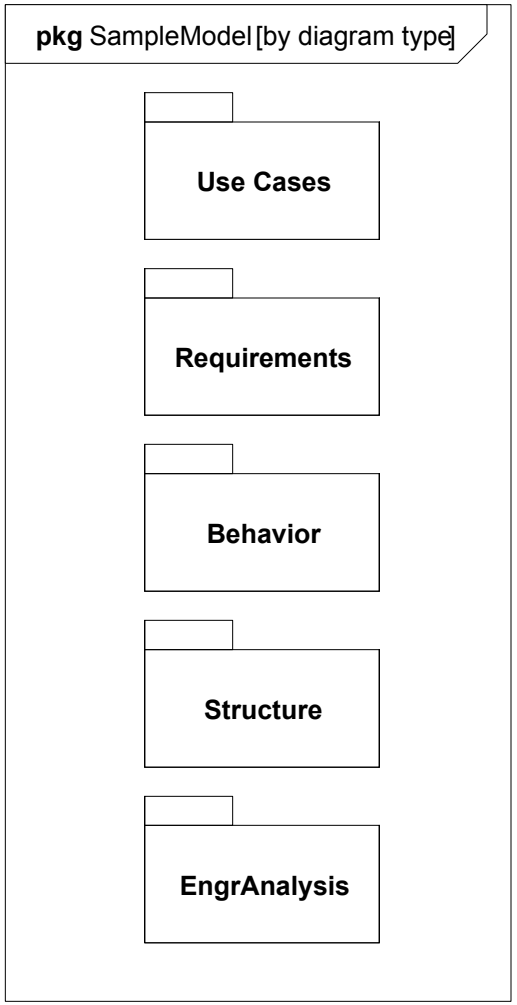

By Diagram/Model Type

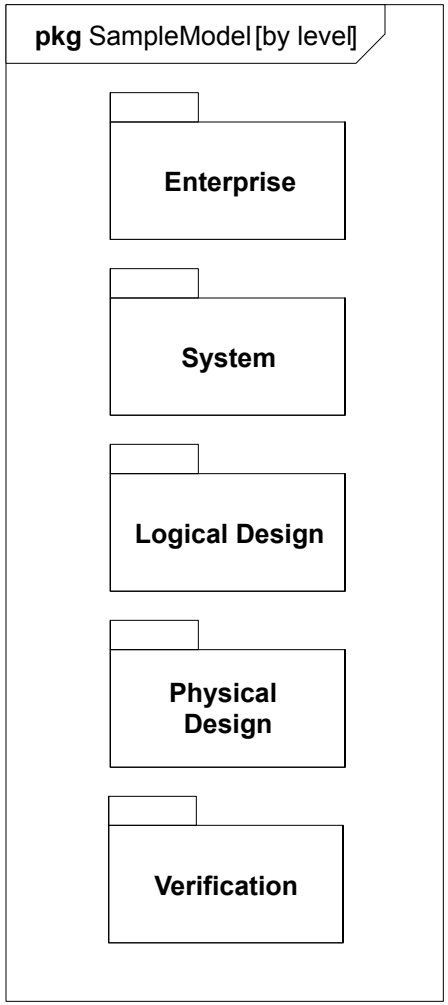

By Abstraction Level

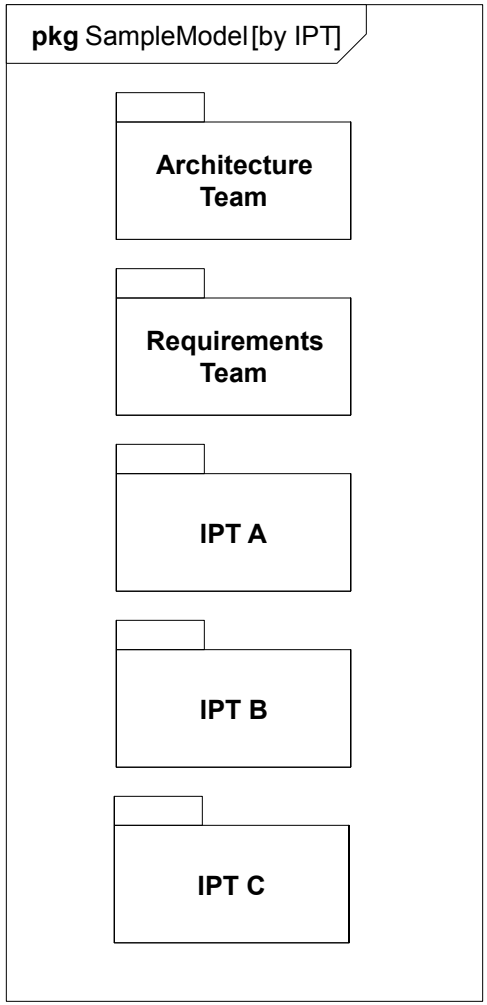

By IPT

Issue #5: SysML vs. Matlab (Descriptive vs. Analytical Models)

Raytheon

- SysML models are descriptive
- Performance models (like Matlab) are analytical

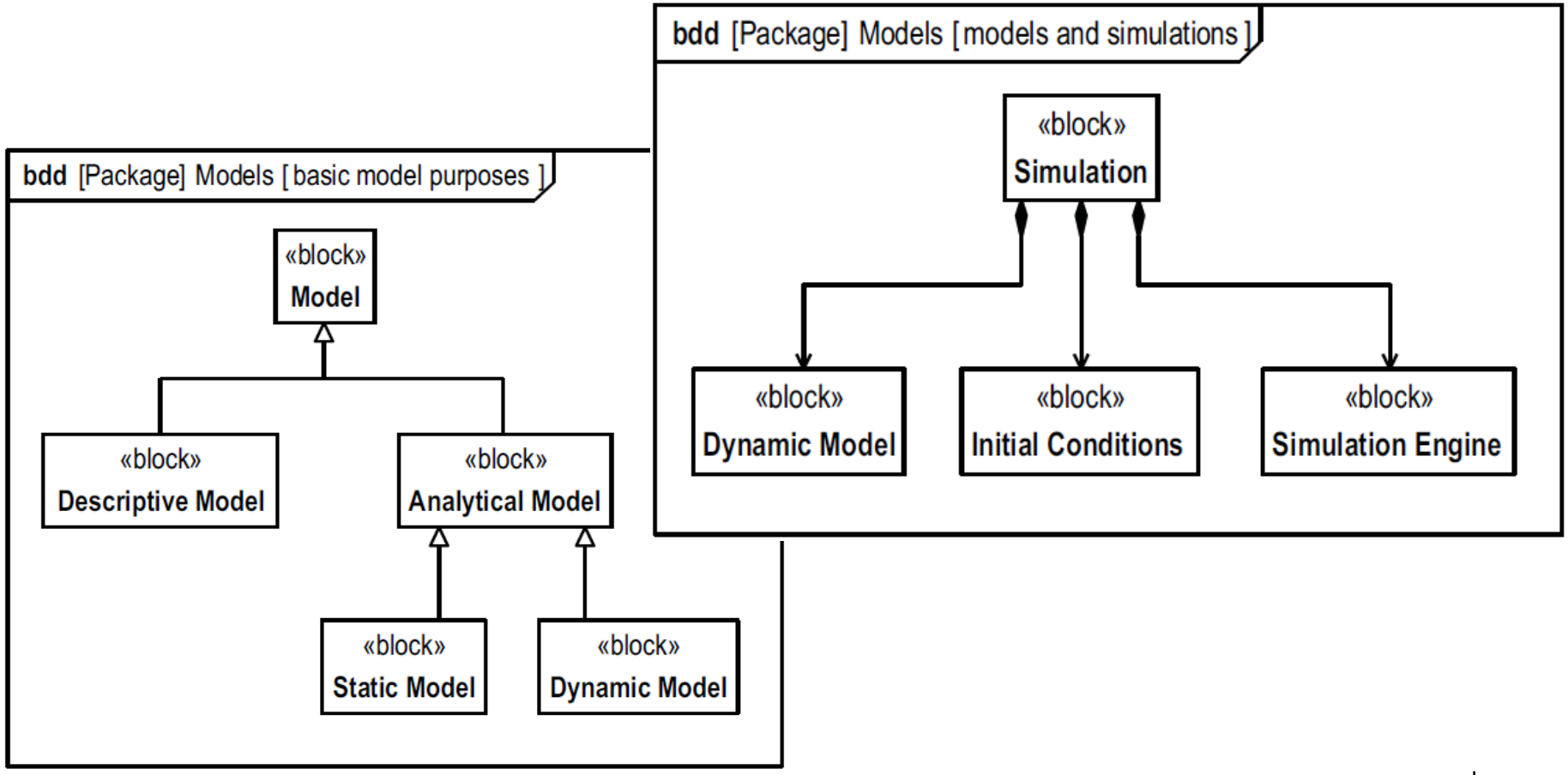

Descriptive Models & Analysis Models

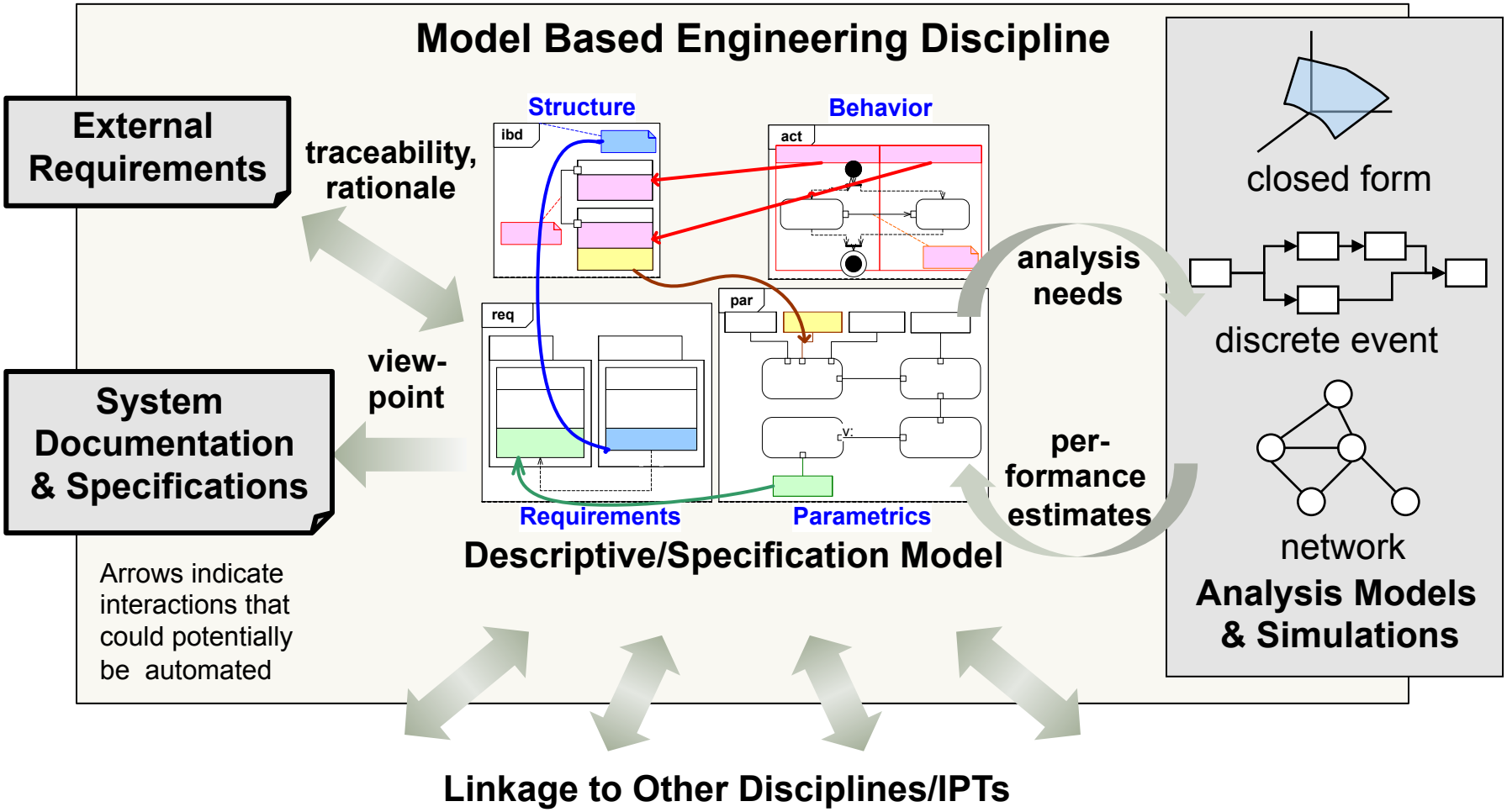

Parametric Modeling Links Descriptive & Analytical Models

Raytheon

- Systems engineers tend not to build parametric models
  - Powerful, unique capability to check model consistency and integrity
  - Linkage to external analysis capabilities/simulations/models
  - Test and validation implications
- This is changing with better vendor support
  - Phoenix ModelCenter “MBSE Pak” plugin
  - InterCAX plugin for MagicDraw and Rhapsody
- When this capability works, it is more impressive, meaningful, and powerful than animating the SysML model!

Parametric Example: Air Compressor – Definition & Use

Raytheon

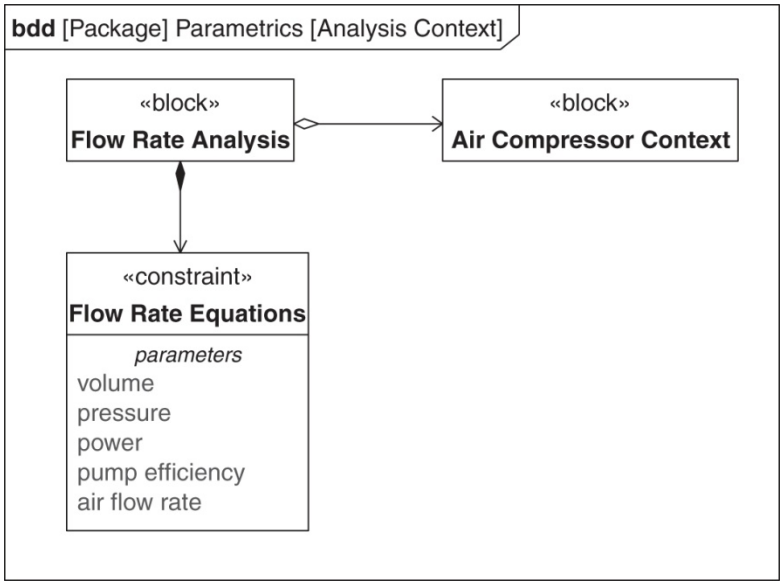

Figure 3.11

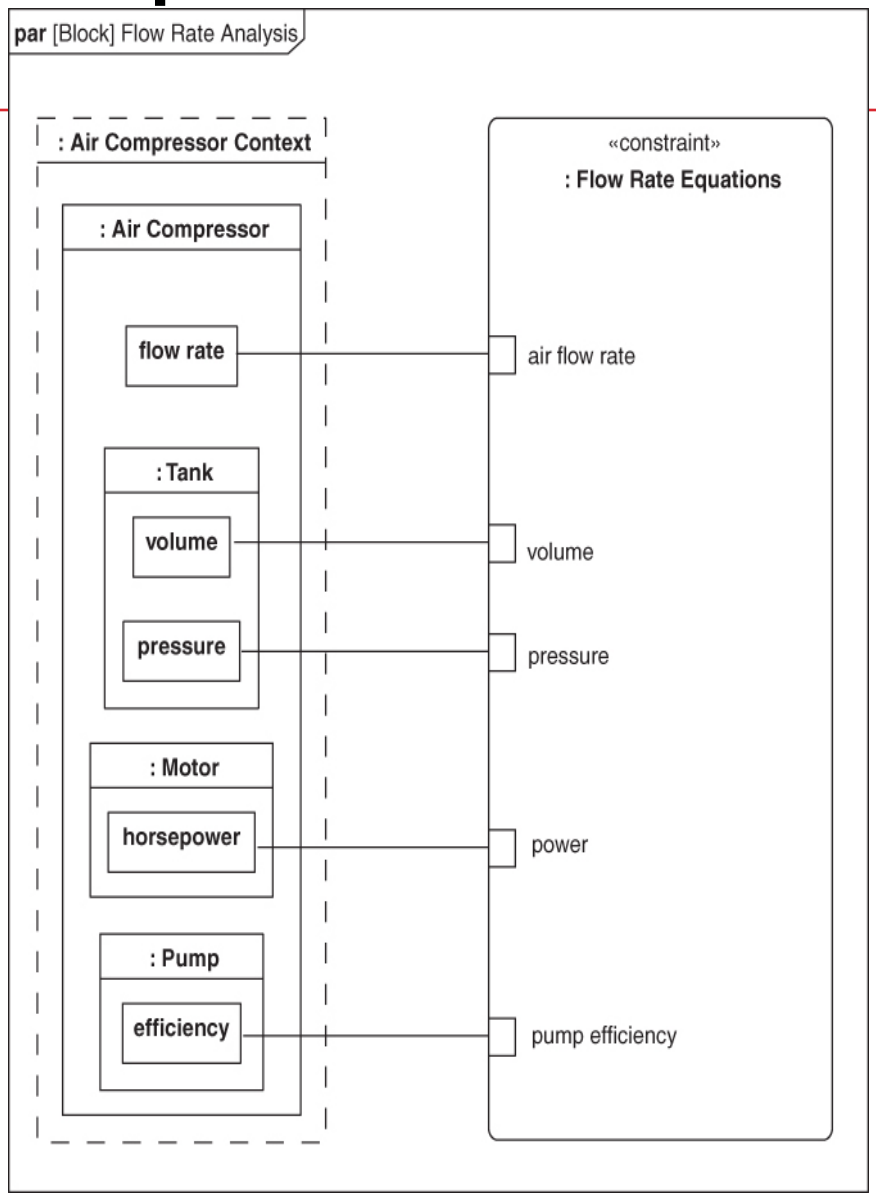

Figure 3.12

Issue #6: Values, Value Types, Units and Dimensions

Raytheon

- We don't think about adding specific values until the performance analysis has already started.
  - Once we start adding values, we discover that we need units and dimensions too. This adds considerable work for the modeler.
- Default values can be added to the block, but actual values require instance specifications
  - Modelers tend to have initial difficulty with instances. Most tools don't support this well
- Standard units and dimensions can be imported as library
  - But custom units and dimensions are almost always required for a new domain
  - ValueTypes must be built from the Units and Dimensions before they can be used. Not a big job, but often overlooked.

"A model without values has no value" – Dr. Darren Kelly

Issue #7: Modeling Functionality vs. Model Execution

Raytheon

- Model execution is becoming important for checking dynamic consistency of the system design.
- "SysML doesn't execute"
  - It was never intended to! Nor does it calculate.
  - Some tools provide execution capability, if you follow their modeling rules (Rhapsody, MagicDraw Cameo, etc.)
- SysML is compatible with foundational UML (fUML) and its action language (ALF)
- The burden of model execution: In addition to a semantically correct behavioral model, there needs to be:
  - A simulation environment, including keeping track of model time
  - A stimulus or input file
  - A visualization/animation capability
  - Resource constraint/utilization based on allocation to structure
- Some of the value of model execution may be gained using linked external models, e.g. Extend
- System model execution is not a substitute for MS&A.
- Choose, but choose wisely!

Backup

4 Pillars of SysML – ABS Example

Raytheon

1. Structure

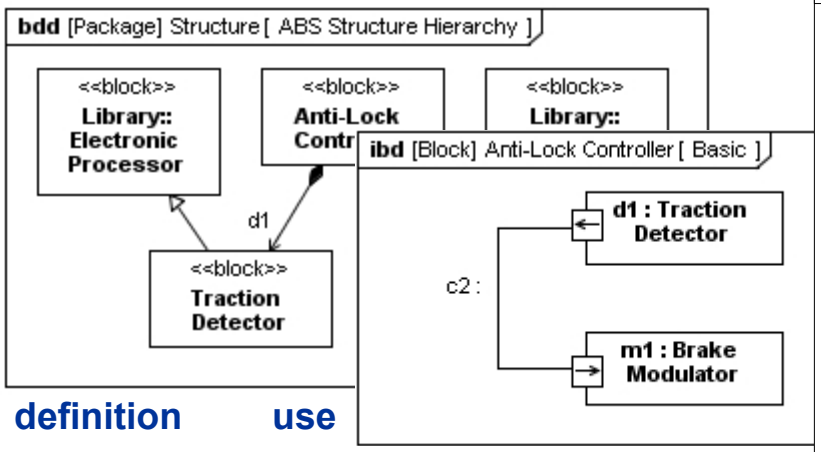

definition **use**

2. Behavior

interaction

state machine

activity/ function

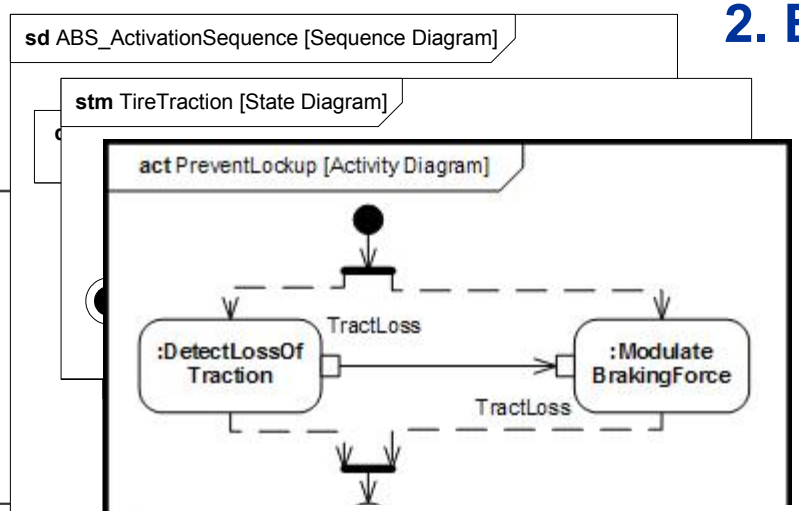

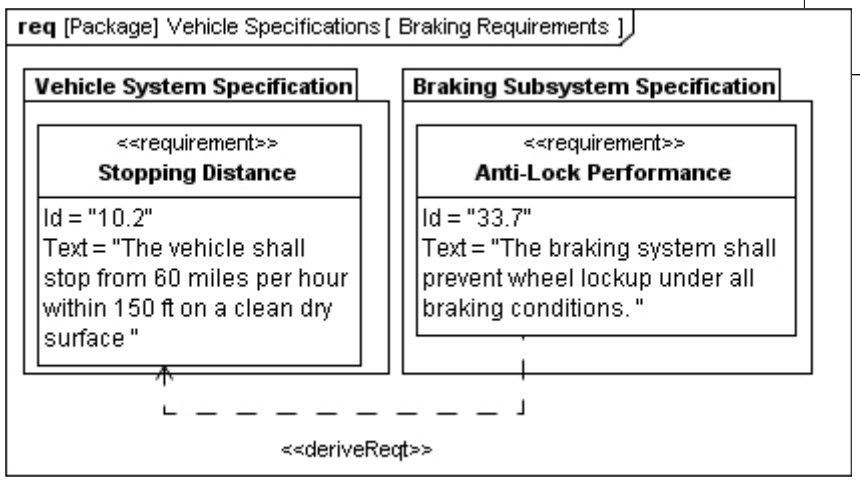

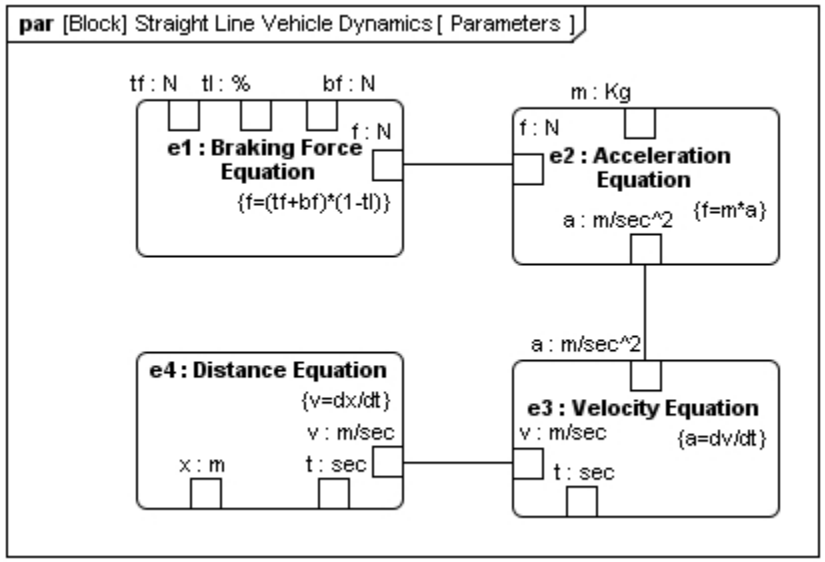

3. Requirements

4. Parametrics

Cross Connecting Model Elements in ABS example

Raytheon

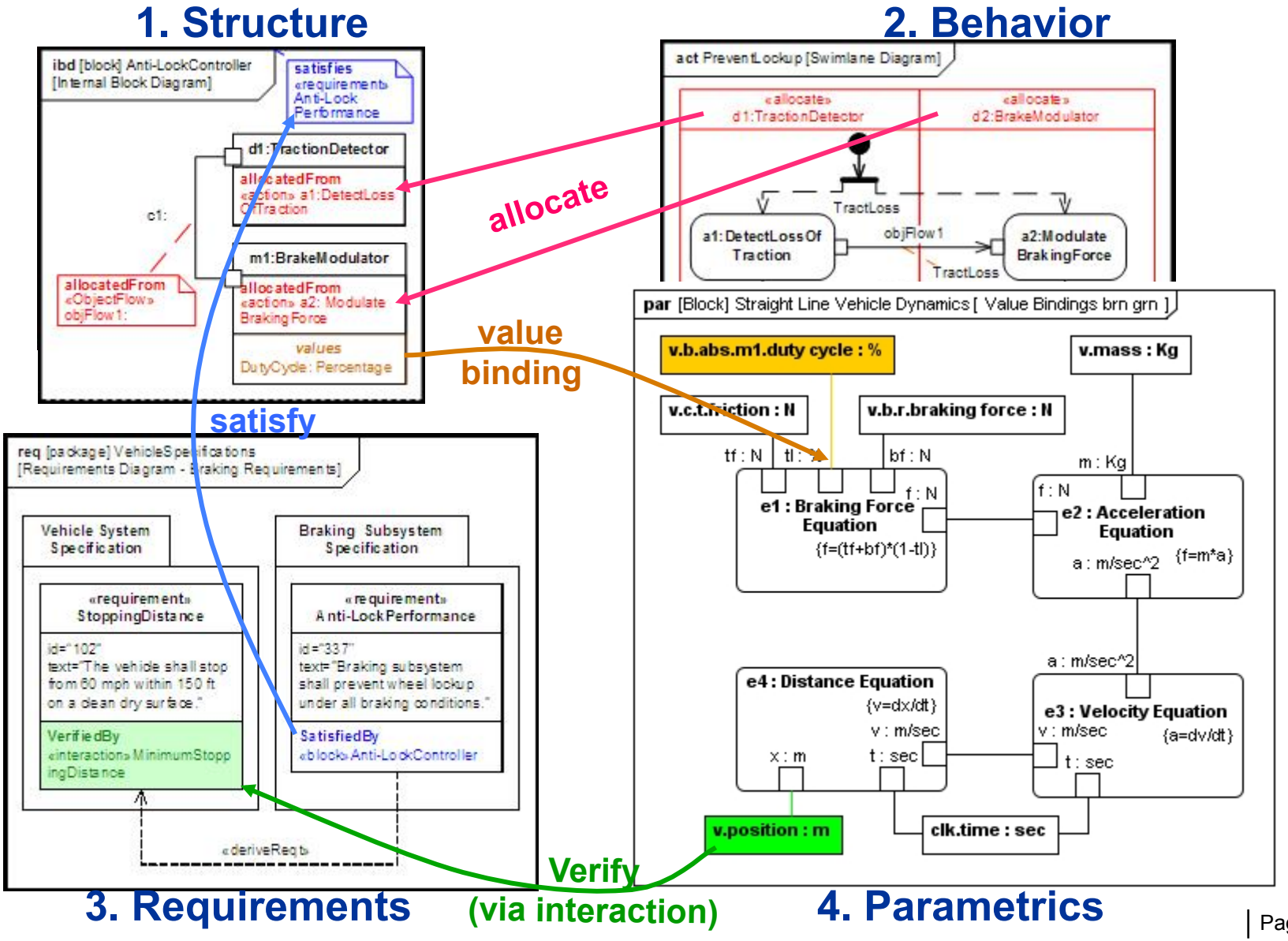

“SysML Light” (Basic Capability)

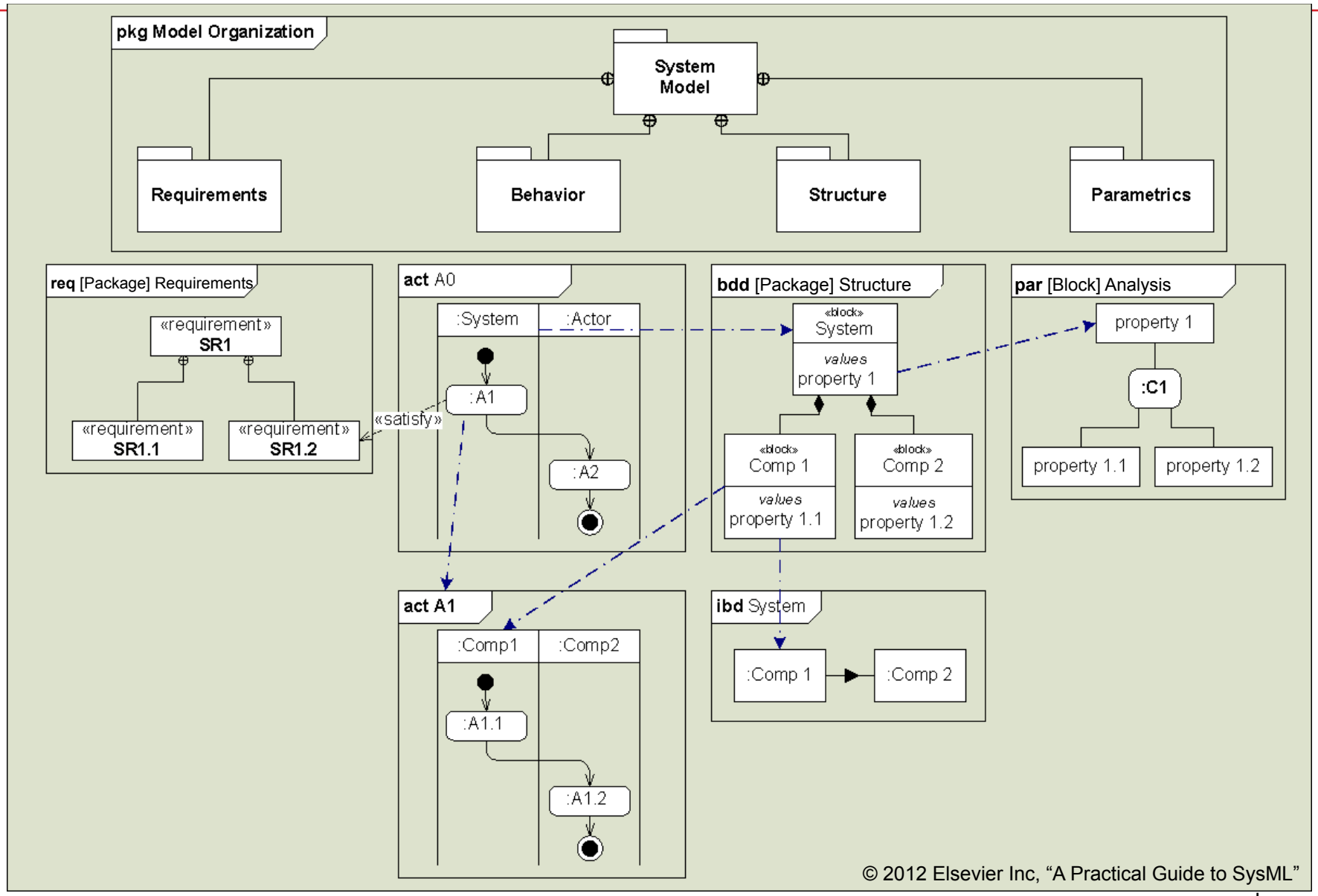

Enhancing Education Using Constraint Graph-based Knowledge Representations [Cowan et al.]

Initial results with high school physics class:
Students using constraint graphs did 70% better

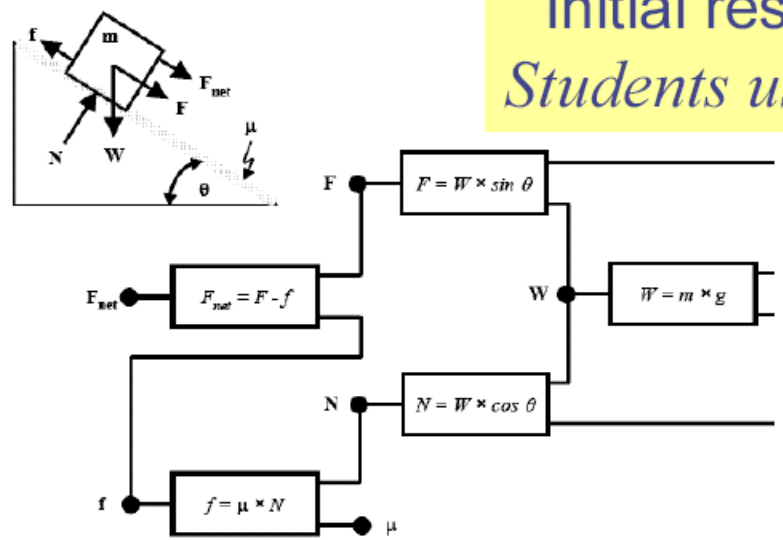

Figure 7. Free body diagram and constraint network with addition of

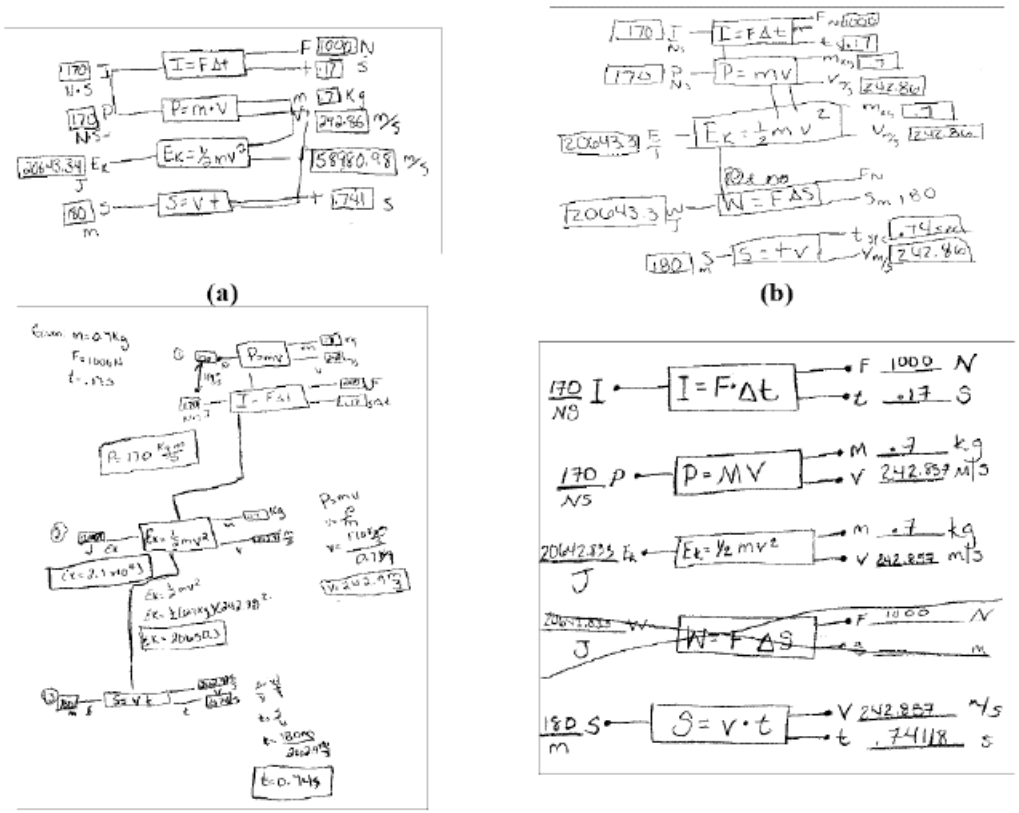

Figure 9. Samples of student-generated constraint networks

"I believe that this process will be helpful to others because I have been doing the same thing in my head to organize and understand the different equations and to help me solve the problems successfully."
[student comment]

Source: FS Cowan, M Usselman, D Llewellyn, A Gravitt (2003) Utilizing Constraint Graphs in High School Physics. Proc. ASEE Annual Conf. & Expo. http://www.cetl.gatech.edu/services/step/constraint.pdf

Three Ways to Model Behavior: Each Invokes Activities

Raytheon